SDF-250

Flux Drying Oven with Digital Thermostat



The ESAB SDF range of drying and storing ovens are large, temperature-controlled cabinets for welding powder flux in a typical industrial operation. They are designed for convenient top loading and bottom removal of welding flux. The easy-to-use digital controller sets and regulates the temperature over a wide range for baking, drying, and storing. Electric heaters embedded inside walls evenly heat the flux without agitation or flux turning.

Heavy insulation, rugged industrial design, external surfaces with electrostatic paint coating and heavy lockable castors make these ovens a great investment for long-term easy use.

Industry

- Process Industry
- Tank and Vessel Fabrication
- Light Equipment



- 250 kg flux drying and storing capacity
- 800 °C-rated fiberglass door seals keep heat inside with embedded heaters and hot pipe system for homogeneous heating
- Rockwool insulated premium steel construction for durability and long life
- Heats up quickly and cools down slowly, making these energy efficient. Retains heat for up to 8 hours when unplugged
- Easy on-off flux disposable valve with oven height perfectly sized for 20 kg bucket under the oven
- Two separate flux chambers offer even heating and convenient batch operation and with a large interior volume (450 x 510 x 600 mm, 275 L)

Visit **esab.com** for more information.

Specifications	
Capacity	250 kg
Storage Temperature	100 - 400 °C
Drying Temperature (Max)	400 °C
Input Voltage	3ph 380 - 415 V
Output Power	7500 W
Output Current	42 A
Dimensions LxWxH	1620 x 820 x1450 mm
Weight	230 kg

SDF-250

Ordering Information	
SDF-250 Flux Drying Oven, 3ph 400V AC 50/60Hz	0700100000

Wear & Spare Parts		
1	Digital Thermostat DT-109A	0700100002
2	Signal Lamp 230V	0700100003
2	Signal Lamp 110V	0700100004
3	Door Handle	0700100006
4	Puller Arm SDF-250	0700100007
5	Castors without Brake Back	0700100008
5	Castors with Brake Front	0700100009
6	Cable Gland - SDE/SDF	0700100031
7	Heating Element 230V - SDE/SDF	0700100011
7	Heating Element 110V - SDE/SDF	0700100012
8	Power Cord 400V with plug CEE 5x32A	0700100013
8	Power Cord 110V with plug - SDE/SDF	0700100014
9	Fuse (automatic) 10A	0700100015
9	Fuse (automatic) 2A	0700100016
10	Contactor 230V	0700100017
10	Contactor 110V	0700100023
11	Power Switch	0700100018
12	Terminal	0700100019
13	Air Valve	0700100020
14	Fiberglass Wick SDF-250	0700100164
15	Thermocouples SDE/SDF	0700100165

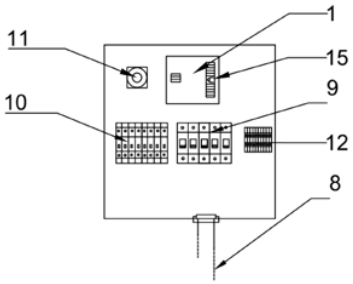

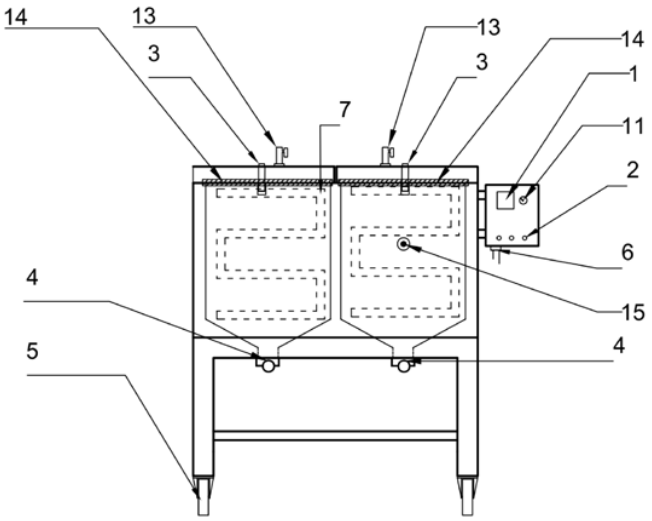

ESAB / esab.com

GLOBALLY CERTIFIED MANAGEMENT SYSTEMS

XA00201220/GL/EN/23-03-17/ESAB reserves the right to alter product images and specifications without prior notice. Product images may not be an exact representation.