Swarm A20

Auto-Darkening Welding Helmet



Swarm A-20

The lightweight Swarm A20 is a heavyweight when it comes to performance and flexibility. Using an advanced auto-darkening filter (ADF), Swarm A20's externally selectable shade range from 9–13 tackles the most demanding welding applications. Further adjustments to delay and sensitivity settings can be made easily with dials inside the helmet. A handy grind setting, also found on the external knob, allows quick attention to finishing work.

With a streamlined shell design, 1/1/1/2 CE optical clarity, and replaceable, long-lasting battery – Swarm A20 is the perfect solution for welders looking to improve weld quality.

- ADF viewing area: 93 x 43 mm (3.6 x 1.7 in.)
- Shade range: DIN 9–13 (adjustable)
- Grind Mode
- CE Optical class: 1/1/1/2
- Arc sensors: 2
- Fully-adjustable delay and sensitivity settings
- Replaceable CR2032 batteries (1)
- Low battery indicator LED
- ADF test button

Visit **esab.com** for more information.

Welding Processes

- SMAW / MMA (Stick)
- MIG / MAG (GMAW)
- Manual Plasma Cutting (PAC)
- Air Carbon Arc and Cutting (CAC-A)
- TIG Welding



Lightweight, streamlined shell design with 1/1/1/2 CE optical clarity.

Swarm A20 Welding Helmet

Specifications	
Viewing Area	93 x 43 mm (3.6 x 1.7 in.)
Active Lens Shade	9–13 (Adjustable)
Passive Lens Shade	4
Power Supply	1 CR2032 batteries, replaceable
Arc Sensors	2
Switch Time (Light to Dark)	0.1 ms
CE Optical Classification	1/1/1/2
Standards and Certifications	CE: EN175; EN379; EN166 | ANSI: Z87.1 | CSA: Z94.3 | Brazil CA
Weight	520g (1.1 lb)

* Grind setting also available.

Ordering Information	
Description	**Part Number**
Swarm A20 Helmet	0700102043

Delivery includes: Full helmet assembly

Spare Parts		
1	Swarm A10 / 20 / 30 External cover lens	0700102036
2	Swarm A10 / 20 / 30 Inner Cover Lens 5 PCS	0700102038
3	Swarm A10 / 20 Headgear	0700102037

Please refer to The ESAB Group Inc.'s Terms and Conditions of Sale available on our website for information regarding applicable warranty coverage.

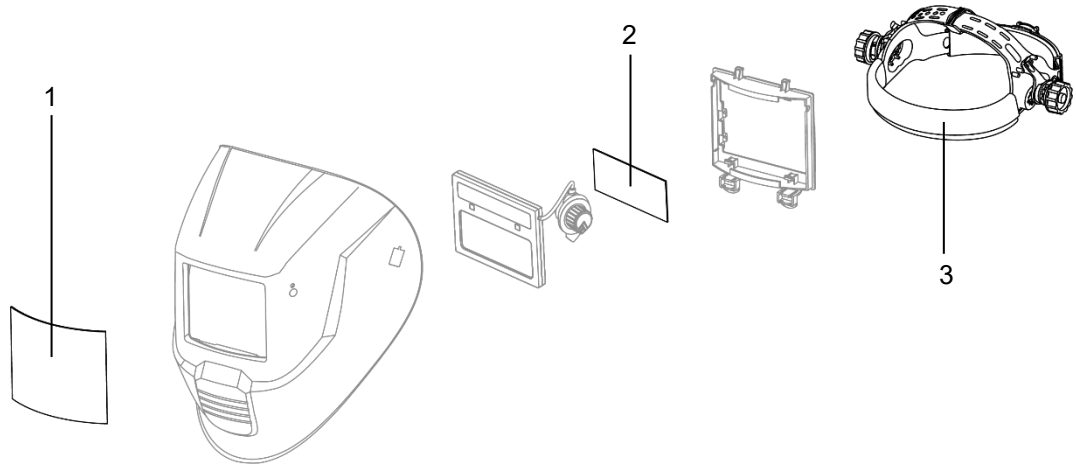

ESAB / esab.com

GLOBALLY CERTIFIED MANAGEMENT SYSTEMS

XA00255021 US/EN 07/2026 ESAB reserves the right to alter specifications without prior notice.